M4244 SERIES

DC/DC POWER SUPPLY

PRODUCT HIGHLIGHTS

- **MINIATURE**
- **HIGH DENSITY**
- **HIGH EFFICIENCY**
- **SINGLE OUTPUT**
- **DC/DC POWER SUPPLY**
- **UP TO 500 W**

Applications

Military (ground-fix, shipboard), Ruggedized, Telecom, Industrial

Special Features

- Miniature size
- High efficiency
- Wide input range
- Input / Output Isolation
- Voltage Sense Compensation
- Fixed switching freq. (250 kHz)
- External sync. capability
- Sync. out capability
- Remote Inhibit
- EMI filters included
- Non-latching automatic recovery protections:
  - Short-circuit
  - Over-voltage
  - Over temperature

Electrical Specifications

DC Input

Voltage range: 18 to 70 VDC IAW MIL-STD-704F

No damage when exposed to MIL-STD-704A transients

Extended Input Optional

12-100Vdc

Please consult factory

Abnormal surge (no damage)

IAW MIL-STD-1275A-D (100 V for 50 ms) and MIL-STD-704A-F (80 V for 0.1 s)

DC Output

Voltage range: 3.3 to 400 V_{DC}
Current range: 0 to 30 A
Power range: 0 to 500 W

Output voltage regulation

Less than ±1%
(no load to full load, –55°C to +85°C and over normal input voltage range).

Ripple & Noise

Less than 50mV_{p-p}, typical (max. 1%) without external capacitance. When connected to system capacitance ripple drops significantly.

***Isolation* – Low voltage version**

Input to Output: 200 V_{DC}
Input to Case: 200 V_{DC}
Output to Case: 200 V_{DC}

***Isolation* – High voltage version**

Input to Output: 500 V_{DC}
Input to Case: 200 V_{DC}
Output to Case: 500 V_{DC}

EMC

Designed to meet* MIL-STD-461F CE101, CE102, CS101, CS114, CS115, CS116, RE101, RE102, RS101, RS103

Transient over-and-undershoot

Output resistance at load change of 50% to 100% is 30 to 120 mΩ (depending on output voltage). Output returns to steady-state value within 300 to 500µs

Efficiency

Typically, 80 to 85%
(28V_{DC} or 270V_{DC} output, full load, nominal input voltage, room temperature)

Turn-on transient

No Voltage overshoot during power on.

* EMC compliance achieved when tested with 5 µH LISNs, shielded harness and static resistive load.

Protections *

Input

- **Under-Voltage Lock-Out**
  Unit shuts down below $16.5V_{DC}$ ± 1V.
- **Over-Voltage Lock-Out**
  Unit shuts down above 75VDC ± 3V.

Output

- **Active Over-Voltage Protection**
  Internal control shuts output voltage down if it exceeds 110% ± 5% of nominal voltage.
- **Passive Over-Voltage Protection**
  Transorb assembled across the output pins, selected at 120% ± 10% of nominal voltage.
- **Under-Voltage Protection**
  Internal control shuts output voltage down (hiccup) if falls below 85% ± 5% of nominal voltage.
- **Current Limiting**
  Continuous protection (10-30% above maximum current) for unlimited time (Hiccup).

General

- **Over Temperature Protection**
  Unit shuts down if baseplate temperature rises above +105°C ± 5°C.
  Automatic recovery when baseplate temperature falls below +95°C ± 5°C.

Environmental Conditions

Designed to meet MIL-STD-810F

Temperature

Operating: –55 °C to +85 °C (at baseplate)
Storage: –55 °C to +125 °C

Altitude

Method 500.4
Procedures I & II – Up to 70 kft.

Salt Fog

Method 509.4

Humidity

Method 507.4
Procedure I
Up to 95% RH

Vibration (random)

Method 514.5
Category 4 - General minimum integrity exposure
IAW Figure 514.5C-17
1 hour per axis.

Shock

Method 516.5
Procedure I
20 g, 11 ms terminal peak saw-tooth,

Reliability

150,000 hours, calculated IAW MIL-HDBK-217F Notice 2 at +85 °C baseplate, Ground Fixed environment.

Notes:

* Thresholds and protections can be modified / removed – please consult factory.

Typical Efficiency Curves

270 V_{DC} output version:

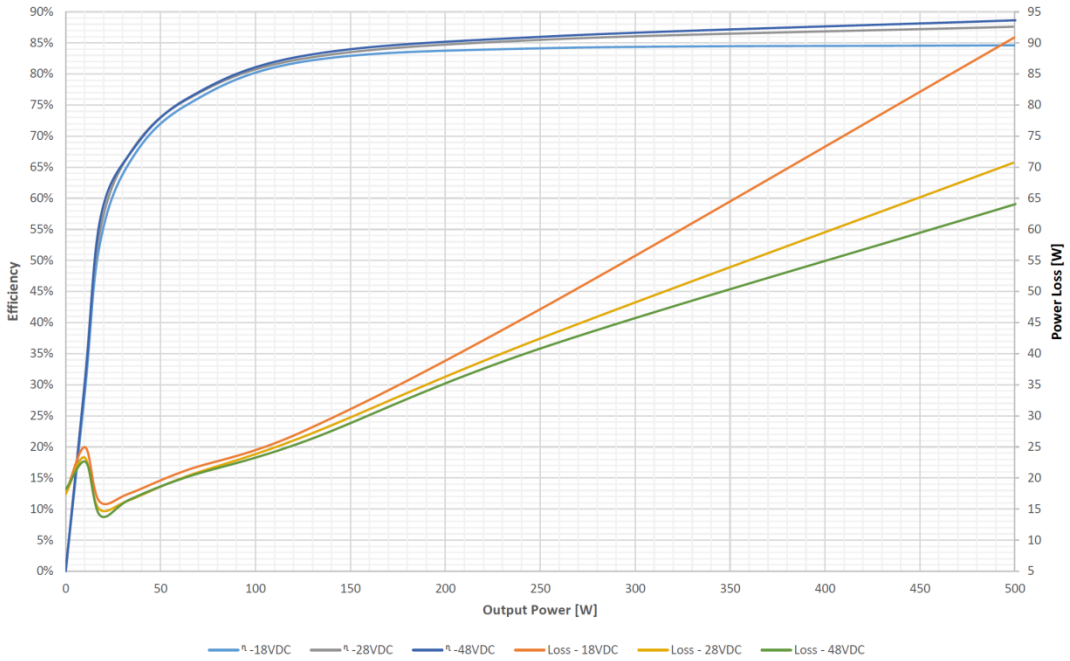

28 V_{DC} output version:

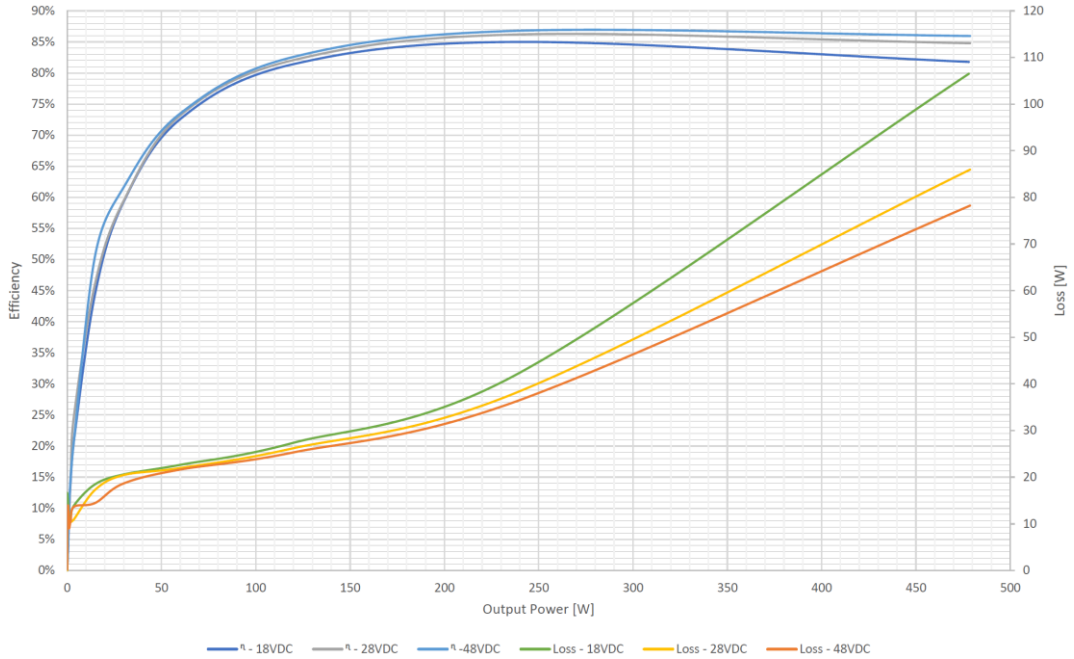

Pin Assignment †

J1 - Input Connector
Type: M24308/24-39F or eq.
Mates with: M24308/2-3F or eq.

Pin #	Function	P	
1	INPUT	+	●
2	INPUT	+	●
3	INPUT	+	●
4	INPUT	+	●
5	N.C.		
6	INPUT RTN	–	●
7	INPUT RTN	–	●
8	INPUT RTN	–	●
9	INPUT RTN	–	●

Pin #	Function	P	
10	*CHASSIS*		●
11	*SYNC IN*	+	●
12	*INHIBIT IN*	+	●
13	*SIGNAL RTN*	–	●
14	INPUT	+	●
15	INPUT	+	●
16	INPUT	+	●
17	INPUT	+	●
18	*N.C.*		

Pin #	Function	P	
19	INPUT RTN	–	●
20	INPUT RTN	–	●
21	INPUT RTN	–	●
22	INPUT RTN	–	●
23	*N.C.*		
24	*INHIBIT OUT*		○
25	*SYNC OUT*		●

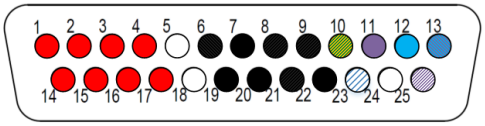

J2 - Output Connector
Type: M24308/23-38F or eq.
Mates with: M24308/4-2F or eq.

Pin #	Function	P	
1	OUTPUT	+	●
2	OUTPUT	+	●
3	OUTPUT	+	●
4	N.C.		
5	OUTPUT RTN	–	●

Pin #	Function		
6	OUTPUT RTN	–	●
7	OUTPUT RTN	–	●
8	N.C.		
9	OUTPUT	+	●
10	OUTPUT	+	●

Pin #	Function	P	
11	OUTPUT	+	●
12	N.C.		
13	OUTPUT RTN	–	●
14	OUTPUT RTN	–	●
15	OUTPUT RTN	–	●

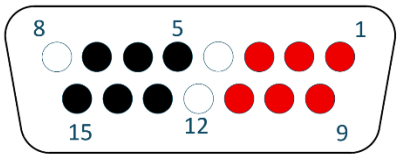

(Connectors shown from front view)

† All pins with identical function/designation should be connected together for best performance.

Functions and Signals

INHIBIT IN

The INHIBIT signal is used to turn the power supply ON and OFF.
TTL "1" or OPEN – Power supply active (output turned on).
TTL "0" or SHORT to Signal RTN – Power supply inhibited (output turned off).
If this function is not required, leave this pin unconnected.

INHIBIT OUT

Used when connecting two units or more in parallel. Connect this signal to the INHIBIT IN pin of the slave unit (see diagram below). This signal synchronizes the shutdown and startup of the units.

SYNC IN signal

The SYNC IN signal is used to allow the power supply frequency to sync with the system frequency.
The system frequency can be 250 kHz ± 10 kHz.
When not connected the power supply will work at 250 kHz ± 10 kHz.

SYNC OUT signal

The SYNC OUT signal is used to sync the system and / or other power supplies with the power supply's frequency.

SIGNAL RTN

The SIGNAL RTN is referred to the input.
This pin is used as a return path for SYNC IN, SYNC OUT and INHIBIT IN.

Typical Connection Diagram

Single converter operation

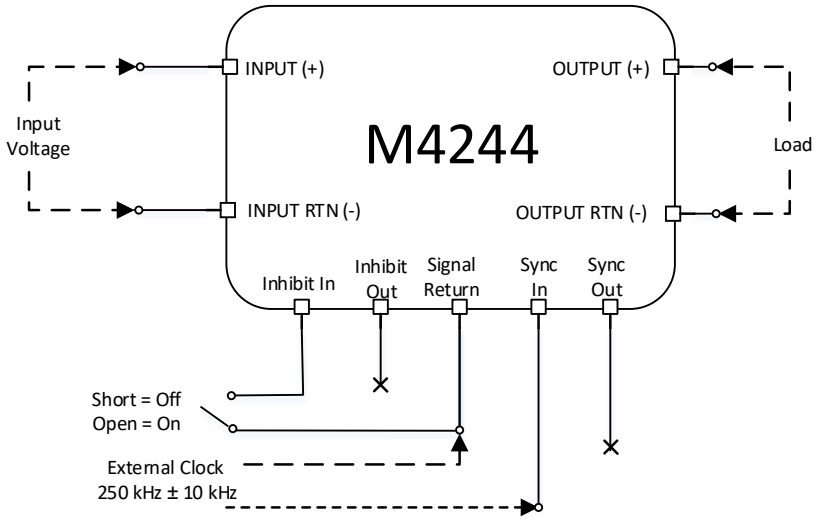

Parallel connection operation

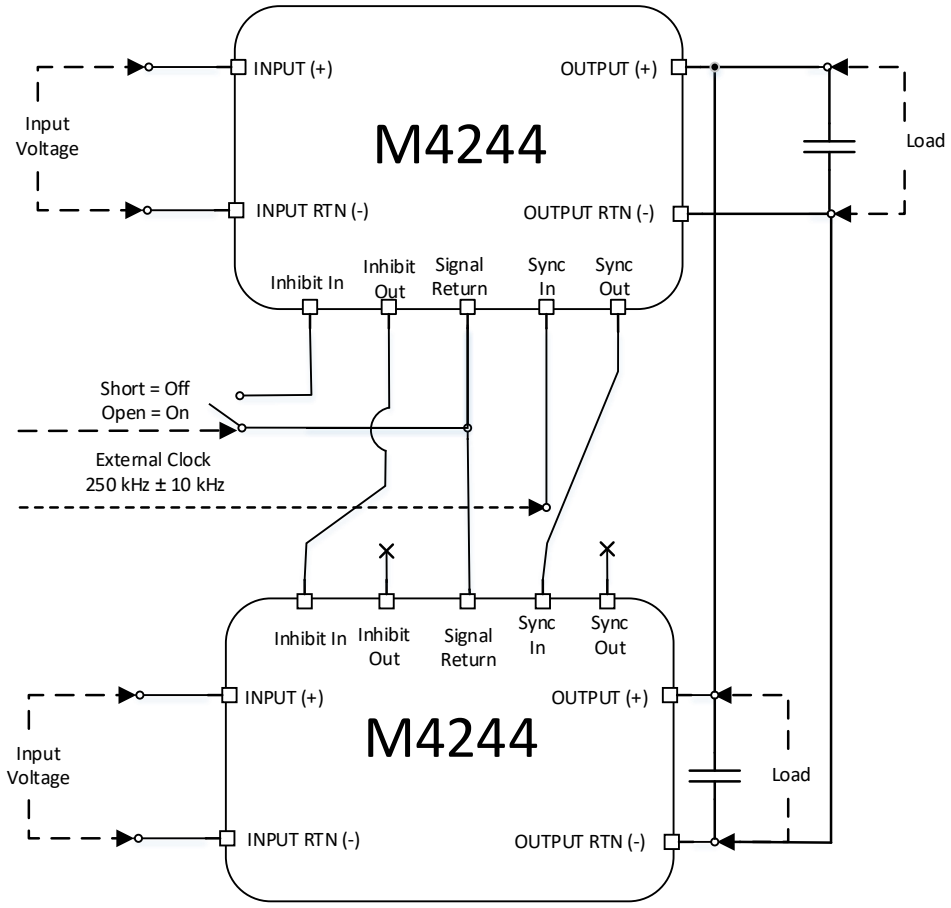

Note: The total regulation (line + load + temperature) is ±2% of nominal voltage.

Outline Drawing

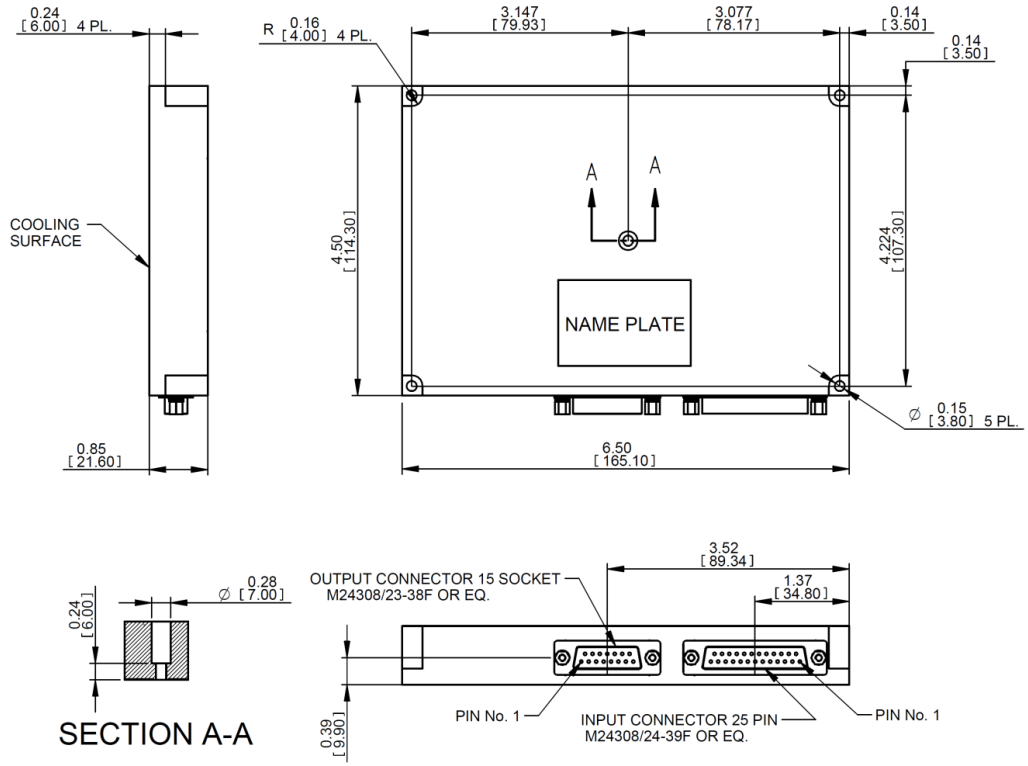

Notes

1. Dimensions are in inches [mm]
2. Tolerance is:
   .XX ± 0.01 in
   .XXX ± 0.005 in
3. Weight: Approx. 25.5 oz [725 g]

Heat Dissipation Surface

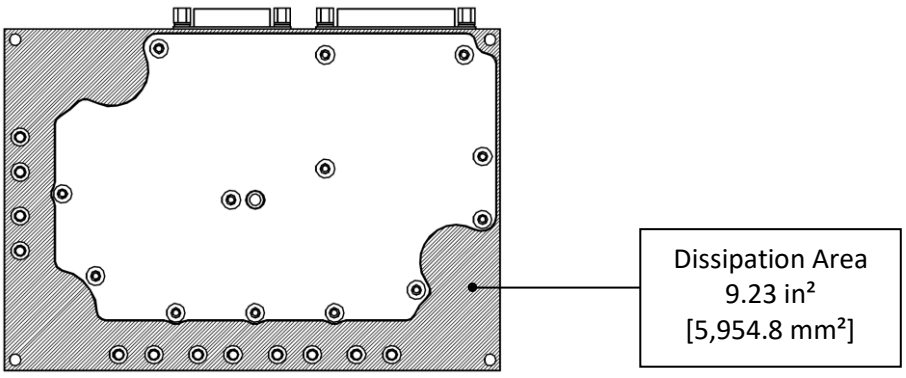

Standard Configurations

Part Number	Input	Output		Special features
	Voltage range	Voltage	Current	
M4244-100	18 to 70 V_{DC}	12 V_{DC}	30 A	
M4244-101	18 to 70 V_{DC}	15 V_{DC}	30 A	
M4244-102	18 to 70 V_{DC}	24 V_{DC}	20 A	
M4244-103	18 to 70 V_{DC}	28 V_{DC}	17 A	
M4244-104	18 to 70 V_{DC}	48 V_{DC}	10.5 A	
M4244-105	18 to 70 V_{DC}	270 V_{DC}	1.8 A	
M4244-107	18 to 70 V_{DC}	270 V_{DC}	1.8 A	Parallel operation via output voltage droop. Voltage regulation is ±2%.

Note: Specifications are subject to change without prior notice by the manufacturer